PO240/241 VIADUCT

SHEET 1

To construct this kit you will need the following:

1. A Modellers knife.
2. A pair of sharp pointed scissors.
3. A steel ruler.
4. Glue - UHU Clear Adhesive or Bostik Clear Adhesive are best. Make sure you get the tubes with the narrow nozzle for easy application.
5. A cutting surface - a sheet of card or a cutting mat.
6. Tweezers to hold the smaller components

Your Work Surface

Keep offcuts to one side.

A clean flat working area

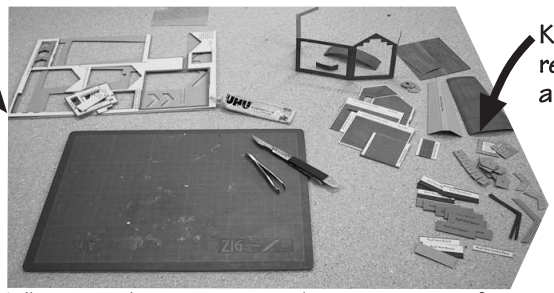

Kit bits ready for assembly.

Keep it tidy. When you have extracted components from the sheet, place them neatly to one side, FACE UP so you don't loose them. TAKE CARE WITH EXTRA SMALL COMPONENTS PLACE MULTIPLES IN PILES TOGETHER. DON'T THROW ANYTHING OUT. Offcuts can come in handy for bracing etc. and it also reduces the risk of accidentally throwing anything away.

NOTE: If you are using UHU clear 20ml tubes, you will need two of them to build this kit.

READ THROUGH ALL THE INSTRUCTIONS BEFORE YOU START. This is complex kit that requires particular attention to fine details.

Each component is fastened to the sheet by means of a score line. These are cut lines that have only gone about three quarters of the way through the card.
To detach each component from the sheet, locate the score line that is holding it in place (these are clearly marked with blue arrows) and carefully run the point of your knife along the scoreline and the item will come seamlessly away. CAUTION - be very careful when running the point of your knife along these score lines. It is easy to run out of the groove and cut something you shouldn't.

CHECK LIST This kit pack should contain the following:

- 4 x SHEET A - Side walls and arched sections.
- 4 x SHEET B - End walls and shorter side walls.
- 1 x SHEET C - Trackbed strips and wing walls
- 1 x SHEET D - Viaduct arch roofs.
- 1 x SHEET E - Viaduct arch roofs + Spare brick/stone.
- 2 x GREY Sheet 'A' with main viaduct strengthener.
- 2 x GREY Sheets 'B' with various strengtheners.
- 1 x A3 INSTRUCTION SHEET 1 (this sheet).
- 1 x A4 INSTRUCTION SHEET 2.

GREY CARD SHEET 'A'

Cut along this scoreline to release from sheet

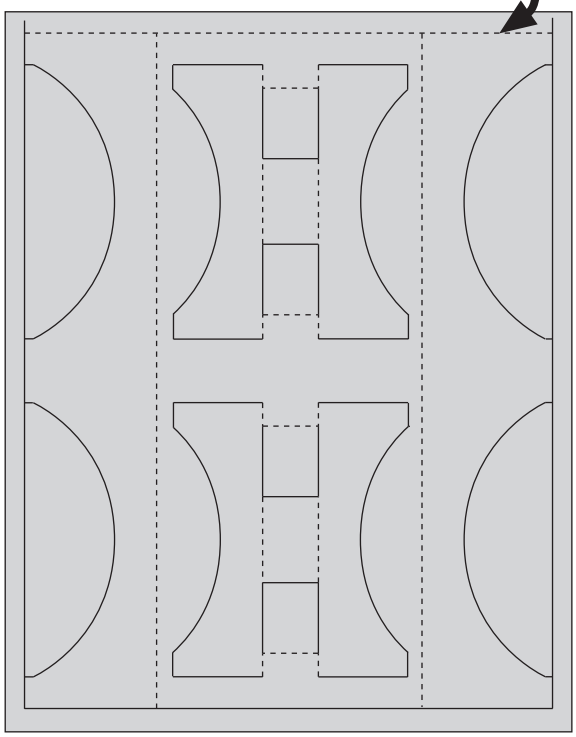

Fig. 1. MAIN VIADUCT STRENGTHENER.

There are two identical mainframe strengtheners that fold and glue to form a rigid inner chassis to hold the whole structure together.

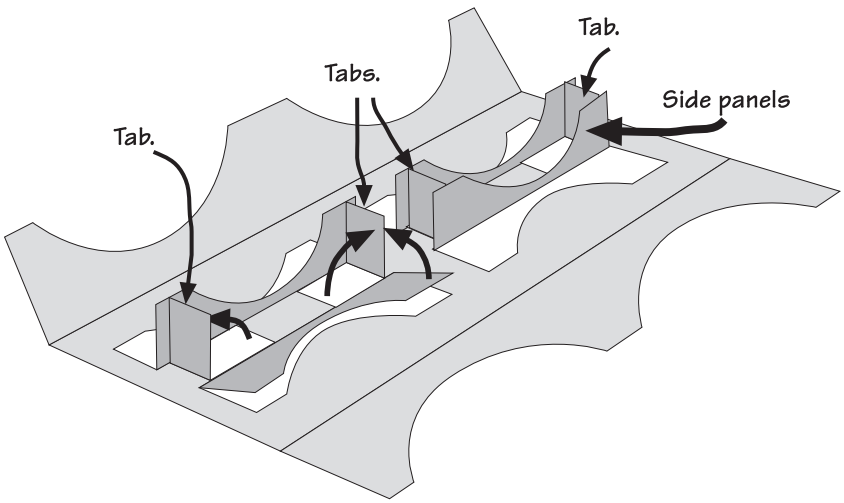

Start with the inner arch formers.
The four tabs and four side panels all fold up at rightangles to the base (top when its turned over later on). Put spots of glue on the edges of the tabs and fix the side walls to them, hold until fast.

Don't throw the offcuts away these will come in handy later.

GREY CARD SHEET 'B'

Cut along the three vertical scorelines to release all the components.

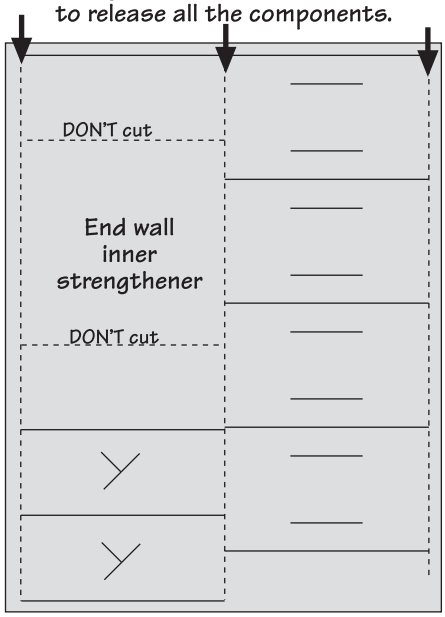

Fig. 2.

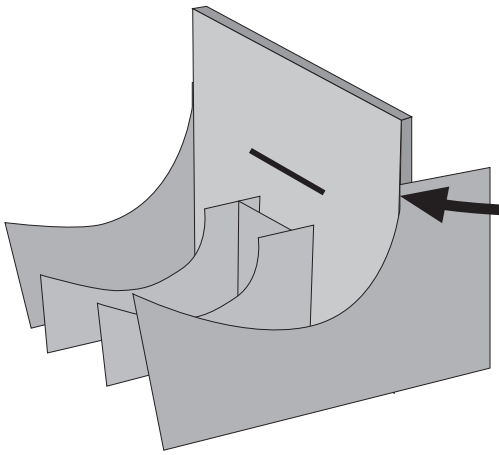

Fix up against the inner arch formers and flush with the outer wall where the arch ends and the wall starts to run vertically.

Inner grey card supports. Fix each one with the embossed groove facing inwards towards the arch. These act as guides when fixing the arched roof sections.

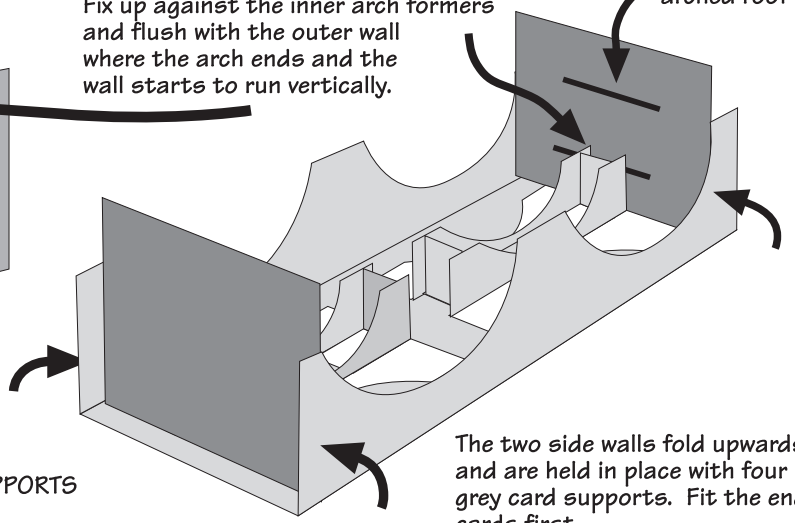

The two side walls fold upwards and are held in place with four inner grey card supports. Fit the end cards first

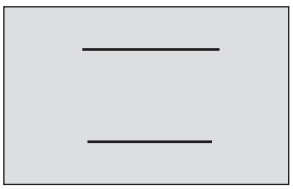

INNER SUPPORTS

Use the four grey cards with the two score lines.

Fig. 3.

EXTRA NOTE: To make the two centre supports rigid, they need to be braced using a piece of waste card cut to 22mm. wide and fitted in between. This will stop them bending when the pier walls are glued against them.

Fit the two centre inner supports. Making sure that the score lines face in towards the arch.

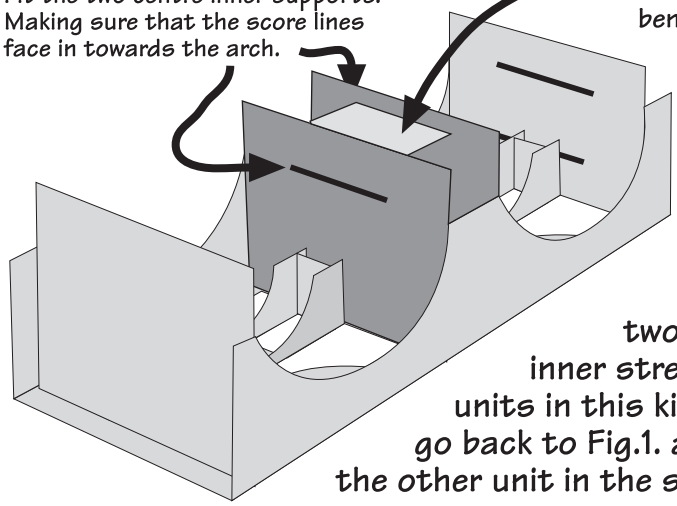

There are two of these inner strengthener units in this kit, so now go back to Fig.1. and make the other unit in the same way.

Fig. 4.

END WALL INNER STRENGTHENER

This is a simple structure.
Fold down the sides and fit
the two supports marked
with a

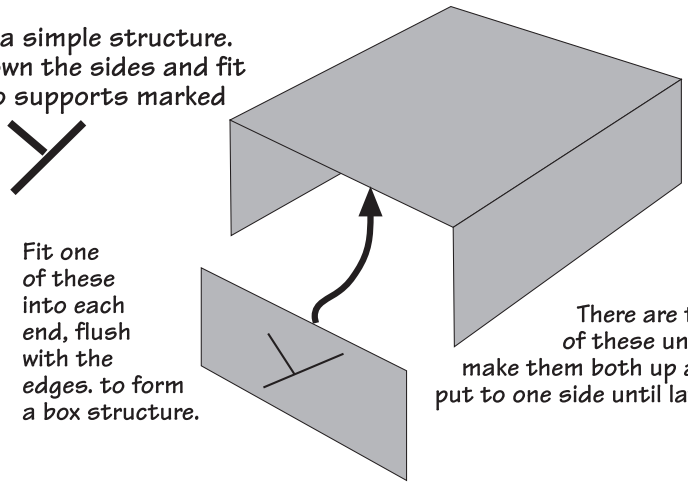

Fit one
of these
into each
end, flush
with the
edges. to form
a box structure.

There are two
of these units,
make them both up and
put to one side until later.

Fig. 5. BRICK ARCHED ROOF SECTIONS.

This looks as though it could be difficult, but it's not - BUT BE CAREFUL.
Cut along the dotted lines to release each brick arch from the sheet.
Next, fold back all the little grey tabs at each side

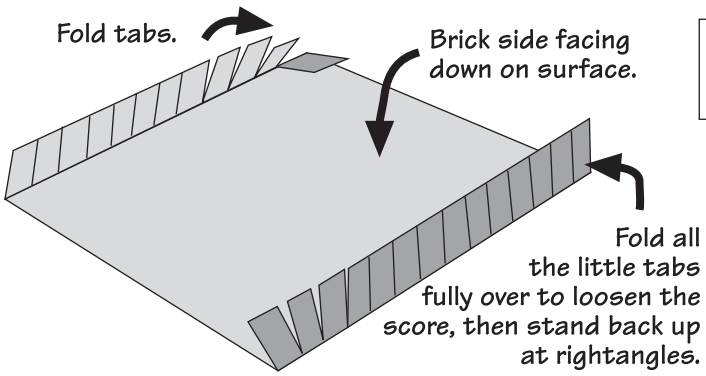

THE FOUR BRICK ARCHED SECTIONS ARE PRINTED ON THIN CARD SHEETS 'D & E'.

Fig. 6.

Curve the card into an arch, and you will see how the grey tabs fan out and stand up at rightangles.

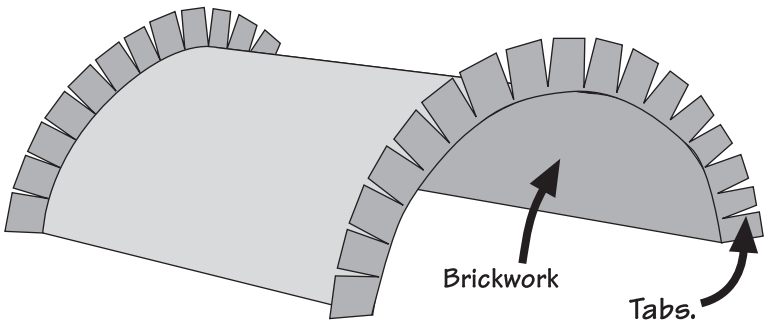

Fig. 7. FITTING THE ARCH ROOF.

Turn the arched brick roof over and push down inside the strengthener unit. DON'T GLUE YET
This is so you can see how it fits with the tabs folded over the outside of the side walls.

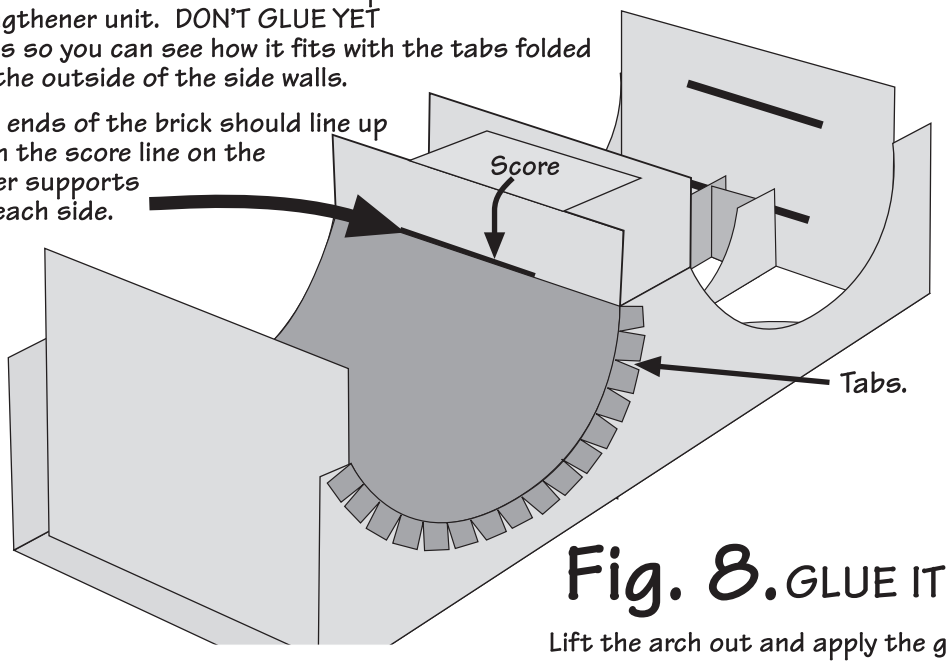

Fig. 8. GLUE IT DOWN.

Lift the arch out and apply the glue.

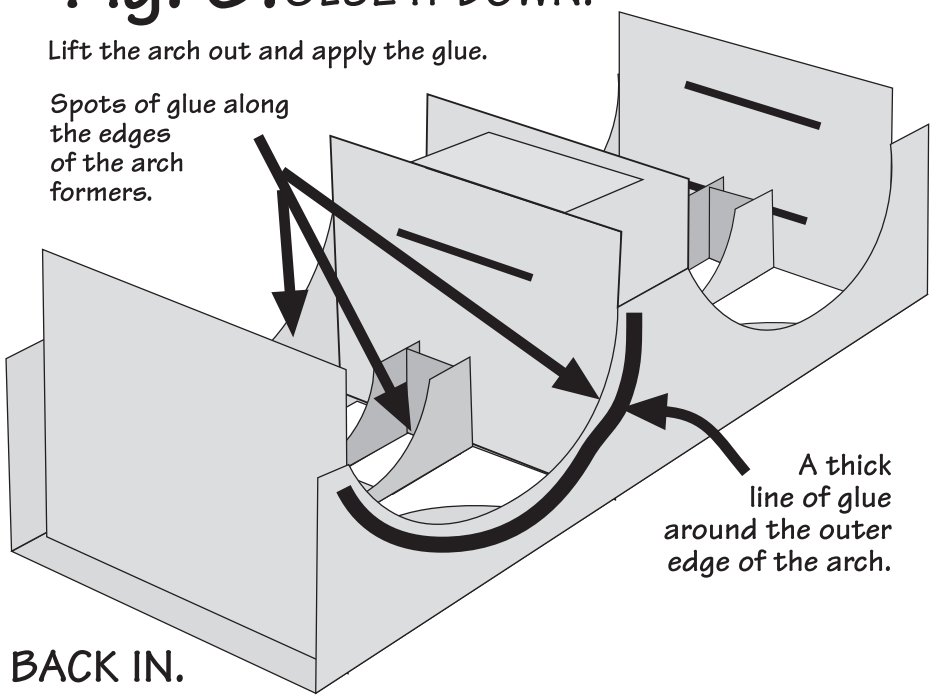

Fig. 9. FIT THE ARCH BACK IN.

Before the glue has a chance to dry, drop the arch back in so it sits in the same position that you had it in Fig. 7. Make sure the ends line up with the scorelines then push the arch against the formers and fold the tabs on to the glue. Keep pressing all edges and tabs until the glue has set.

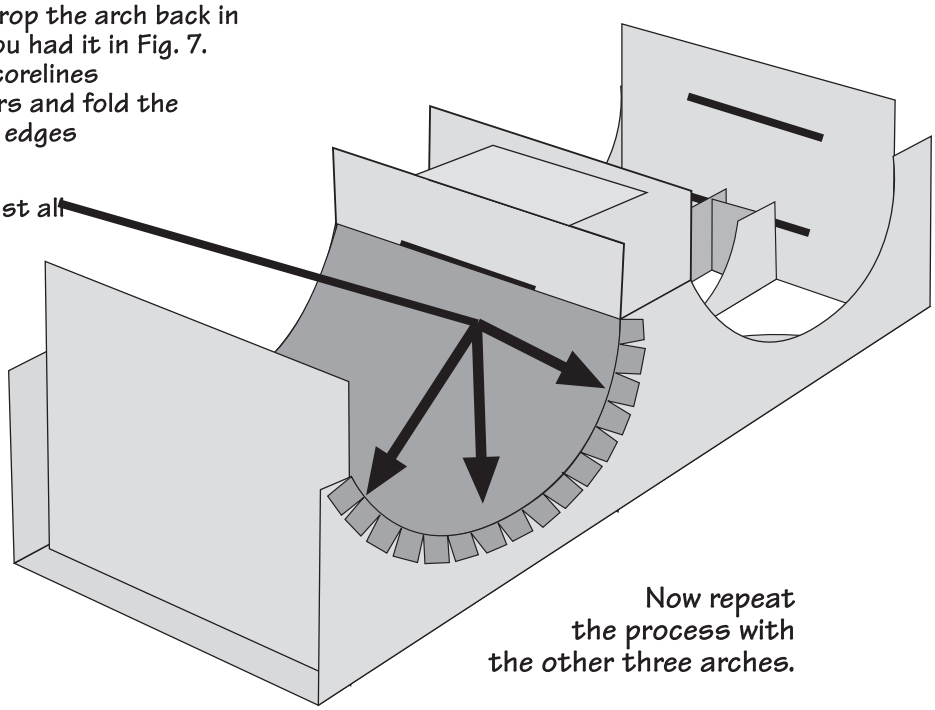

Fig. 10. FITTING THE VIADUCT SIDE WALLS.

Each side wall also contains the piers, and a half width of the inner pier walls. With plenty of glue covering the side wall of the inner strengthener and placing it upside down on your work surface, carefully press the side wall on to the glued area. Make sure all edges are flush.
Keep pressing edges together until fast.

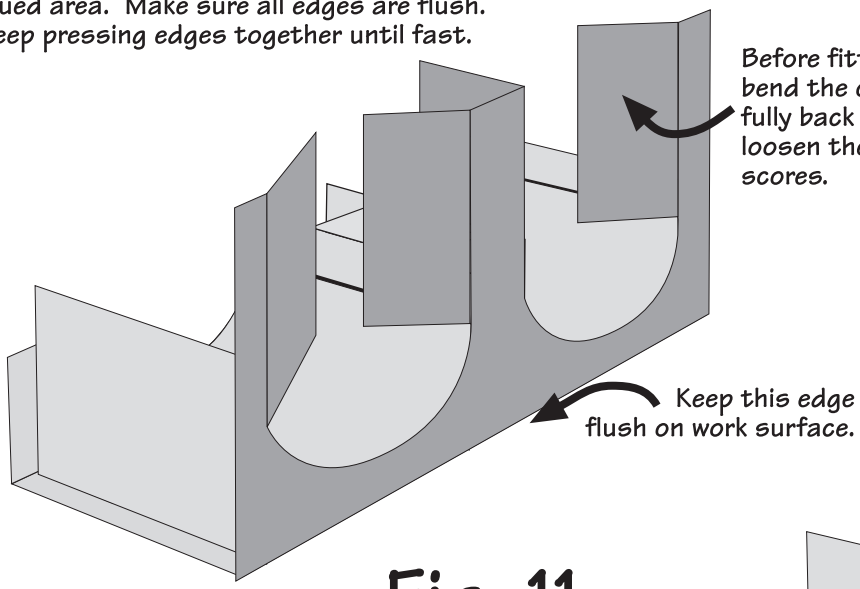

When the side wall is fast, fix the other side wall in the same way.

Fig. 11.

FIX THE INNER PIER WALLS TOGETHER.

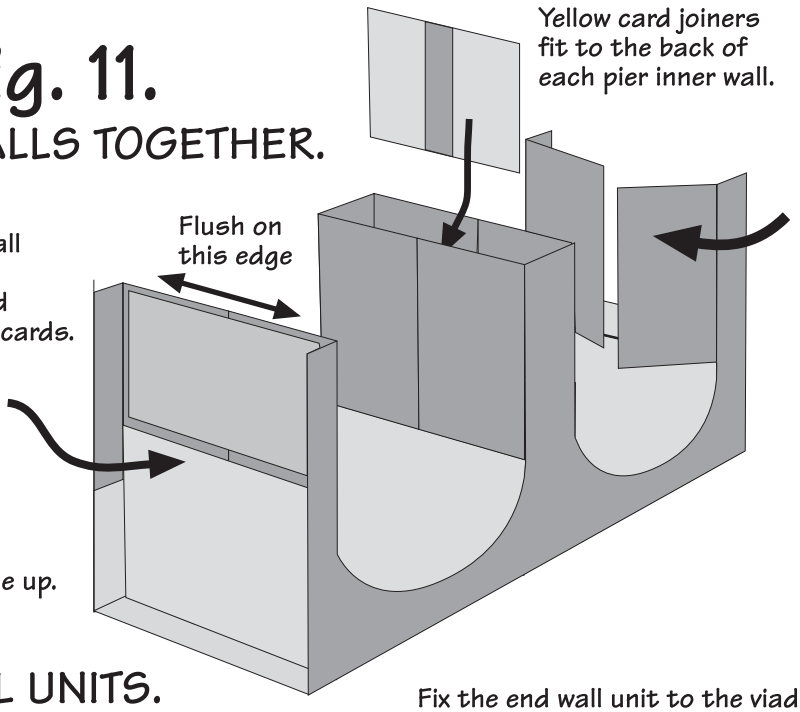

The two halves of each inner pier wall fold and meet in the centre, butt ended together. They are fixed from behind using the yellow joiner cards. A few spots of glue is also needed on the inner support cards as well

Push the two halves of the walls together and hold firmly until fast. Make sure the two edges meet evenly all the way along and that the top edges line up.

Fig. 12. END WALL UNITS.

The end wall units are the walled bits that fit on each end of the viaduct and run in to the embankments.

Take the end wall inner strengthener section that you made in Fig.4. and fit the two end wall sections

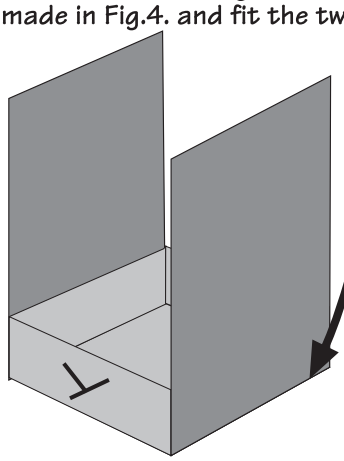

Fix the end wall unit to the viaduct.

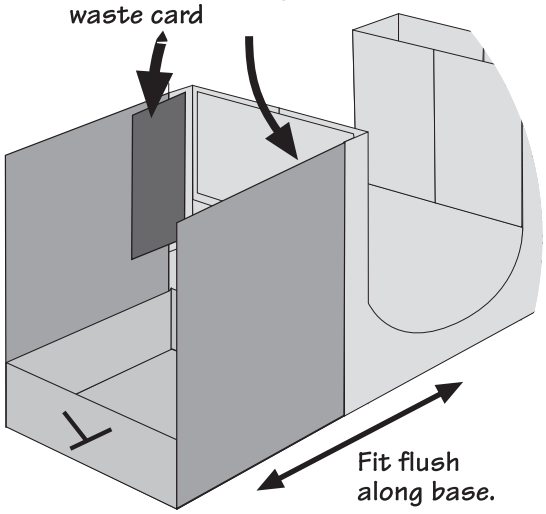

Fig. 13.

FIX TWO HALVES OF VIADUCT TOGETHER.

The two completed half sections of the viaduct need to be fastened together. At all stages, make sure that all edges line up flush with each other.

If you are making the viaduct longer by adding extra kits, add them on at this stage before fixing the top walls.

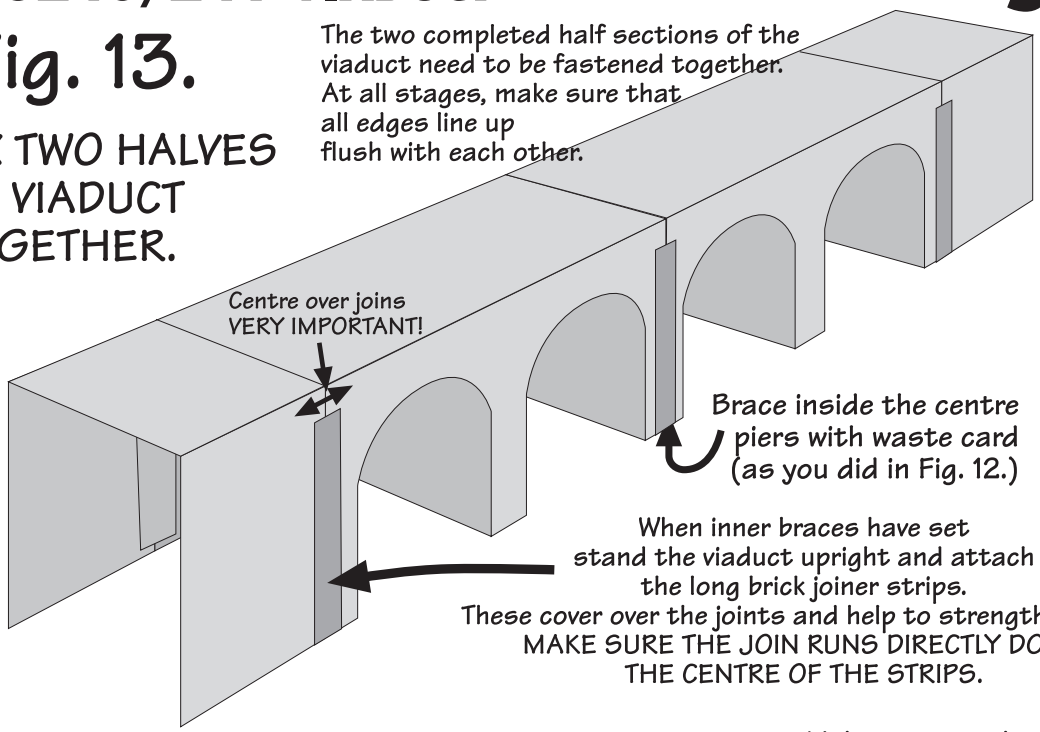

Brace inside the centre piers with waste card (as you did in Fig. 12.)

When inner braces have set stand the viaduct upright and attach the long brick joiner strips. These cover over the joints and help to strengthen them MAKE SURE THE JOIN RUNS DIRECTLY DOWN THE CENTRE OF THE STRIPS.

Fig. 14. SIDE WALL SECTIONS.

All the wall sections fit together in the same way. The inner part of the wall consists of two strips that fold along the base and glue back to back to form a double sided wall.

Fold two halves together and glue.

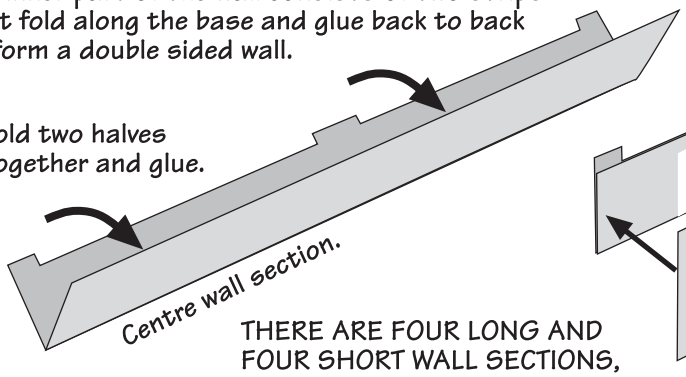

Make sure you glue the outer wall to the side with all the white strips on it, market 'Center Wall'.

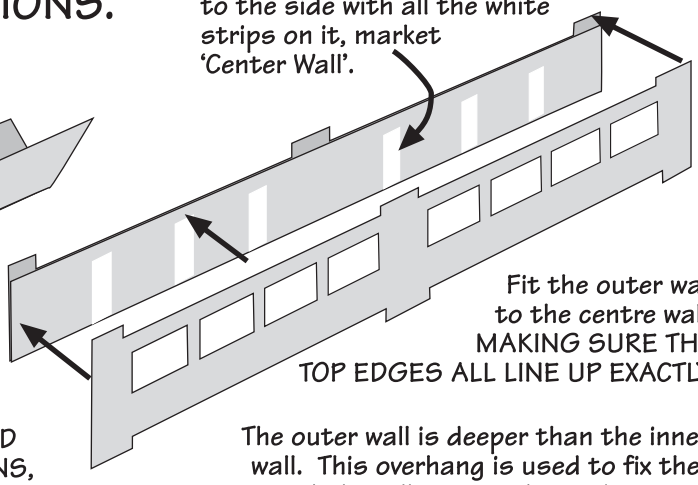

Fit the outer wall to the centre wall, MAKING SURE THE TOP EDGES ALL LINE UP EXACTLY.

THERE ARE FOUR LONG AND FOUR SHORT WALL SECTIONS, THEY ALL FIT TOGETHER IN THE SAME WAY

The outer wall is deeper than the inner wall. This overhang is used to fix the whole wall unit to the viaduct.

Fig. 15. FIT ALL THE WALLS TO THE VIADUCT.

Inner wall sits on top.

Outer wall fixes to side of viaduct.

Joiner strip.

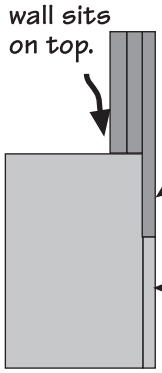

Fit each wall section so that the ends line up exactly with the joints between viaduct/end wall units.

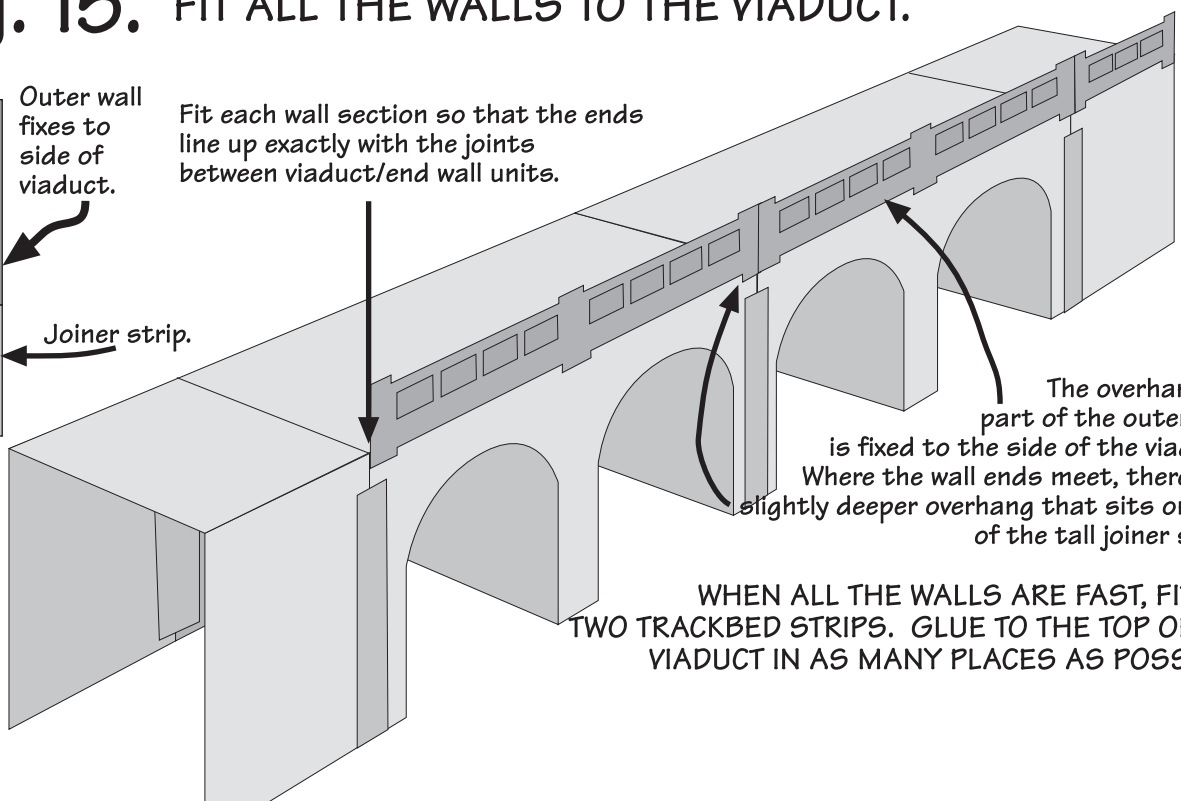

The overhanging part of the outer wall is fixed to the side of the viaduct. Where the wall ends meet, there is a slightly deeper overhang that sits on top of the tall joiner strip.

WHEN ALL THE WALLS ARE FAST, FIT THE TWO TRACKBED STRIPS. GLUE TO THE TOP OF THE VIADUCT IN AS MANY PLACES AS POSSIBLE.

Fig. 16. WALL FASCIA PIECES.

These are used to strap the walls together where they meet.

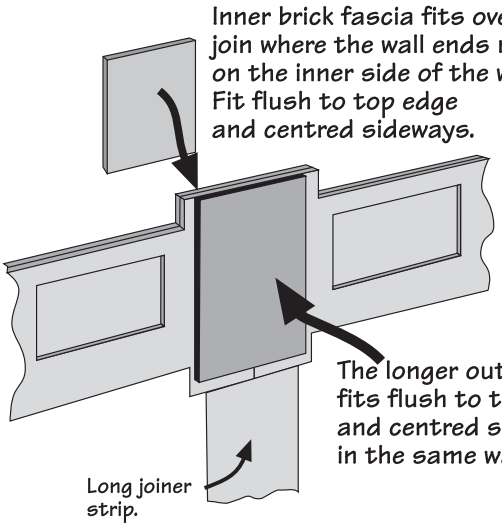

Fig. 17. WALL END FASCIA .

This little unit is designed to fit either side of the wall ends, but they need trimming down to give you 2 x left hand & 2 x right hand units.

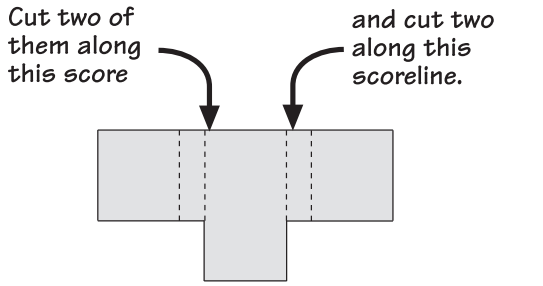

They then wrap around the wall ends.

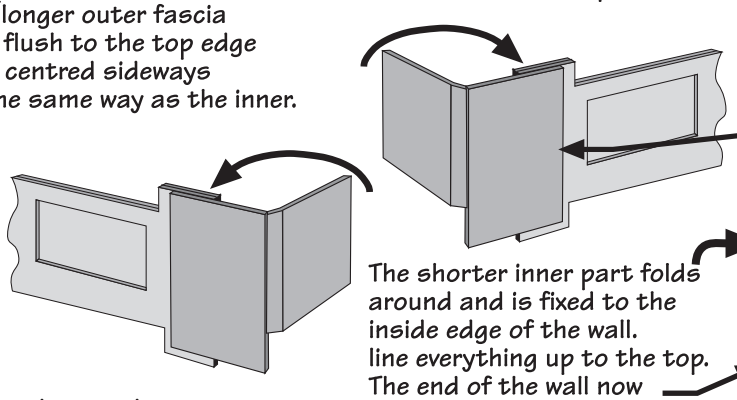

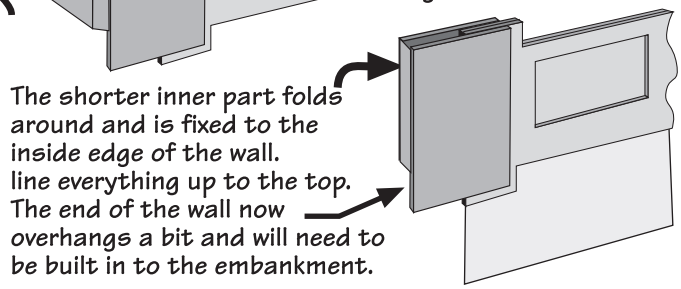

Fig. 18.

WALL TOPS .

Fit the wall top stone strips so they overhang equally on both sides.
The cap stones fit on the raised brick sections and should overhang equally on all four edges.

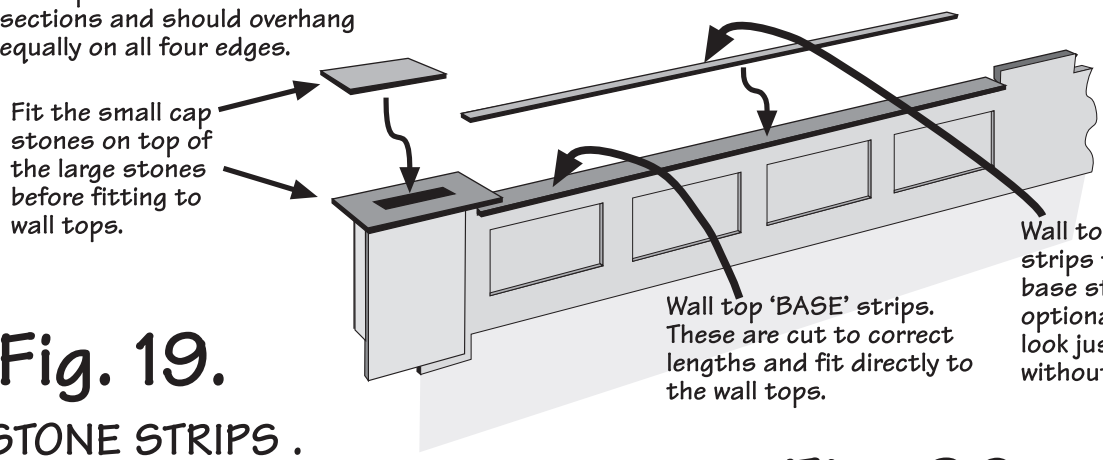

Fig. 19.

STONE STRIPS .

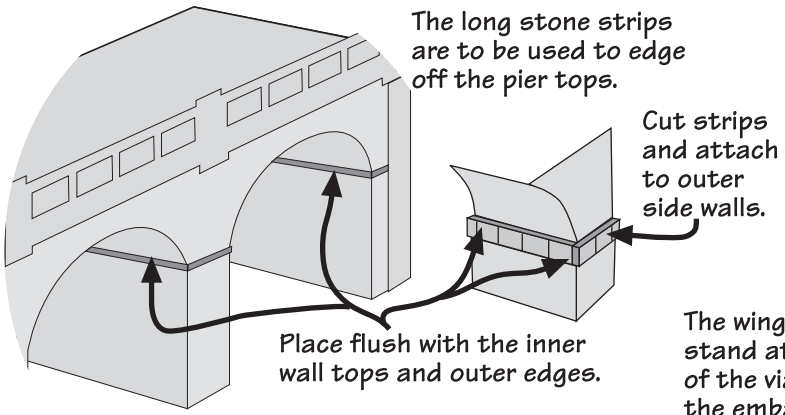

CORNERS & EDGES.
If you want to hide the card that shows on the scored corners, you can paint them using a very fine brush and very much watered down paints. TEST ON WASTE CARD FIRST, it's easy to make a mess and ruin your kit. If you are not sure - just leave them alone - it still looks fabulous!

Fig. 20. WING WALLS.

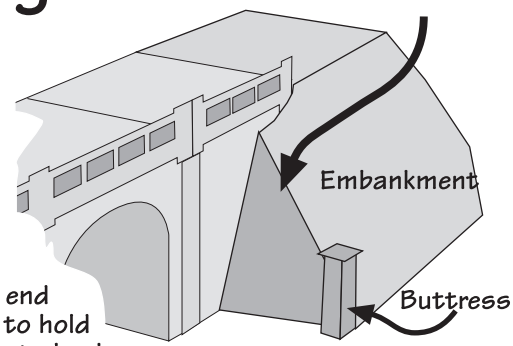

The wing walls stand at each end of the viaduct to hold the embankments back.
Top off, with stone edging strips, and fit the buttress to the end of the wall.
The buttress walls fold around and fix where the two half sections meet, using the yellow joiner fitted inside. The large and small capping stones fit on top.